21.Driven Gear Assembly

A: REMOVAL

1) Remove the manual transmission assembly from the vehicle. <Ref. to 6MT-34, REMOVAL, Manual Transmission Assembly.>
2) Prepare the transmission for overhaul. <Ref. to 6MT-39, Preparation for Overhaul.>
3) Remove the oil pipe, neutral position switch, back-up light switch and harness. <Ref. to 6MT-41, REMOVAL, Oil Pipe.> <Ref. to 6MT-43, REMOVAL, Neutral Position Switch.> <Ref. to 6MT-42, REMOVAL, Back-up Light Switch.>
4) Remove the extension case. <Ref. to 6MT-44, REMOVAL, Extension Case.>
5) Remove the transfer driven gear. <Ref. to 6MT-56, REMOVAL, Transfer Driven Gear.>
6) Remove the center differential. <Ref. to 6MT-58, REMOVAL, Center Differential.>
7) Remove the oil pump. <Ref. to 6MT-59, REMOVAL, Oil Pump.>
8) Remove the transmission case. <Ref. to 6MT-63, REMOVAL, Transmission Case.>
9) Remove the driven gear assembly. <Ref. to 6MT-68, REMOVAL, Main Shaft Assembly.>
10) Remove the needle bearing.

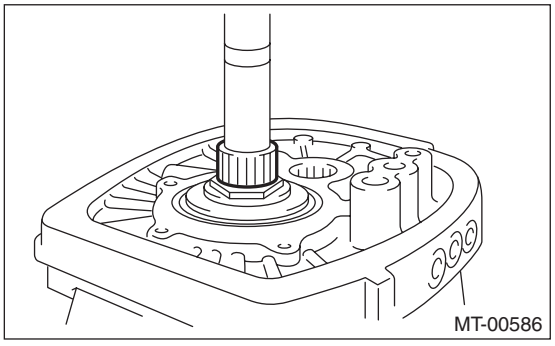

11) Remove the thrust needle bearing.

B: INSTALLATION

1) Adjust the main shaft snap ring. <Ref. to 6MT-79, ADJUSTMENT, Main Shaft Assembly.>
2) Adjust the 1st-2nd shifter rod. <Ref. to 6MT-113, ADJUSTMENT, Shifter Fork and Rod.>
3) Install the thrust needle bearing.

NOTE:
Confirm that the thrust needle bearing is installed in the proper direction.

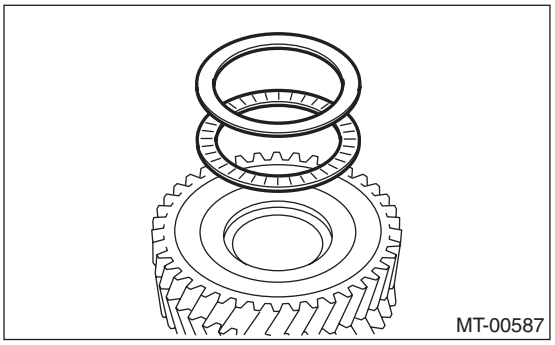

4) Install the 1st needle bearing.
5) Install the driven gear assembly. <Ref. to 6MT-69, INSTALLATION, Main Shaft Assembly.>
6) Install the transmission case. <Ref. to 6MT-64, INSTALLATION, Transmission Case.>
7) Adjust the backlash of the driven gear assembly in the axial direction. <Ref. to 6MT-88, ADJUSTMENT, Driven Gear Assembly.>
8) Install the oil pump. <Ref. to 6MT-61, INSTALLATION, Oil Pump.>
9) Install the center differential. <Ref. to 6MT-58, INSTALLATION, Center Differential.>
10) Install the transfer driven gear. <Ref. to 6MT-56, INSTALLATION, Transfer Driven Gear.>
11) Install the extension case. <Ref. to 6MT-44, INSTALLATION, Extension Case.>
12) Install the oil pipe, neutral position switch, back-up light switch and harness. <Ref. to 6MT-41, INSTALLATION, Oil Pipe.> <Ref. to 6MT-43, INSTALLATION, Neutral Position Switch.> <Ref. to 6MT-42, INSTALLATION, Back-up Light Switch.>
13) Install the manual transmission assembly to the vehicle. <Ref. to 6MT-36, INSTALLATION, Manual Transmission Assembly.>

C: DISASSEMBLY

NOTE:
Individual sleeves and hubs meet at a specified position. Before disassembly, mark the meeting position of the sleeve and hub.
1) Affix the ST to the work table.
ST 18664AA000 BASE
2) Flatten the nut tab.

3) Attach ST3 to the lock nut, set the driven gear assembly to the ST, and remove the lock nut.
ST1 18666AA000 HOLDER
ST2 18664AA000 BASE
ST3 18620AA000 ADAPTER WRENCH

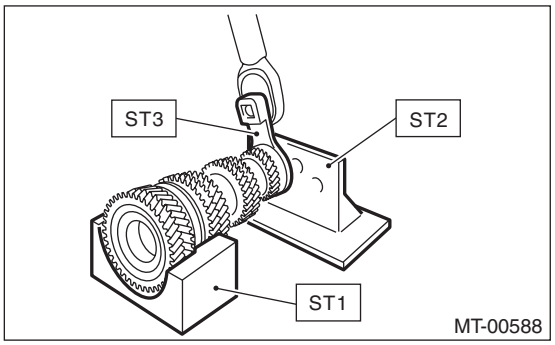

4) Attach ST1 to the 6th gear, then remove the ball bearing and 5th-6th driven gear.
ST1 18723AA000 REMOVER
ST2 499877000 RACE 4-5 INSTALLER

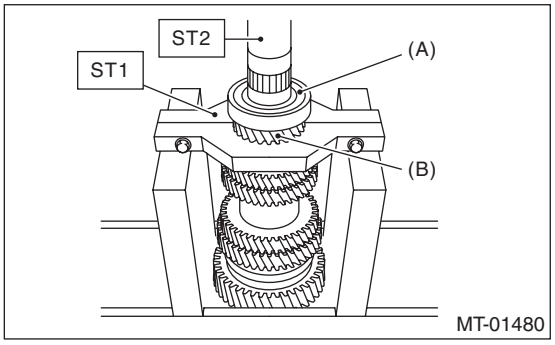

(A) Ball bearing
(B) 5th-6th driven gear

5) Attach ST1 to the 4th gear, then remove the 3rd-4th driven gear.
ST1 18723AA000 REMOVER
ST2 499877000 RACE 4-5 INSTALLER

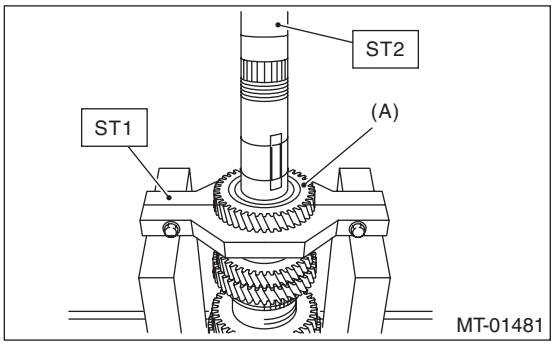

(A) 3rd-4th driven gear

6) Remove the driven gear key.

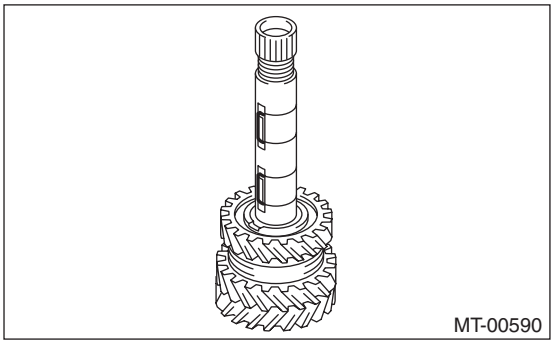

7) Remove the 2nd gear.

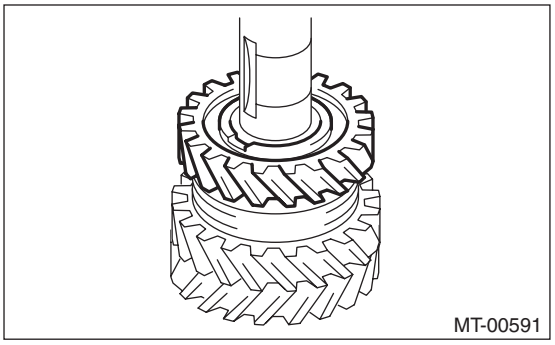

8) Remove the needle bearing and 1st-2nd sleeve.

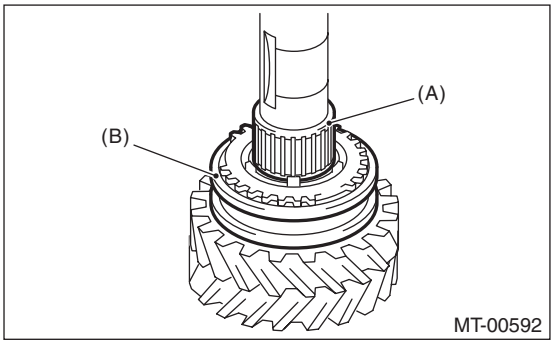

(A) Needle bearing
(B) 1st-2nd sleeve

9) Remove the outer baulk ring, 2nd synchro cone and inner baulk ring.

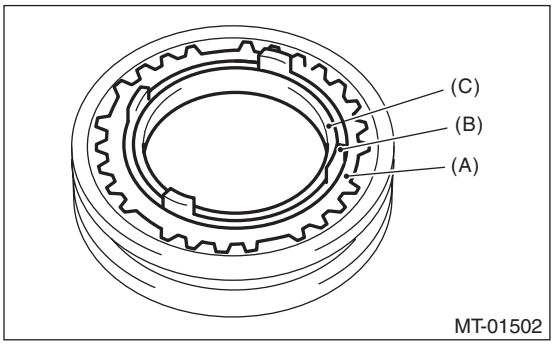

(A) Outer baulk ring
(B) 2nd synchro cone
(C) Inner baulk ring

10) Using the ST, remove individual parts.
ST 18754AA000 REMOVER

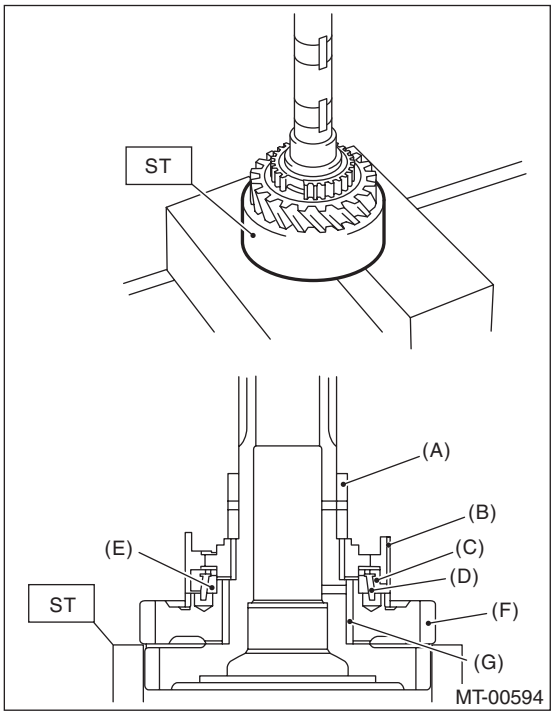

(A) 2nd bushing
(B) 1st-2nd hub
(C) Outer baulk ring
(D) 1st synchro cone
(E) Inner baulk ring
(F) 1st driven gear
(G) 1st needle bearing

D: ASSEMBLY

NOTE:
Replace the following parts as a set.
- Sleeve and hub
- Outer baulk ring, 1st synchro cone and inner baulk ring
- Outer baulk ring, 2nd synchro cone and inner baulk ring

1) Apply adequate gear oil to the main shaft, 1st needle bearing and 1st drive gear inner surface.
2) Install the 1st needle bearing.

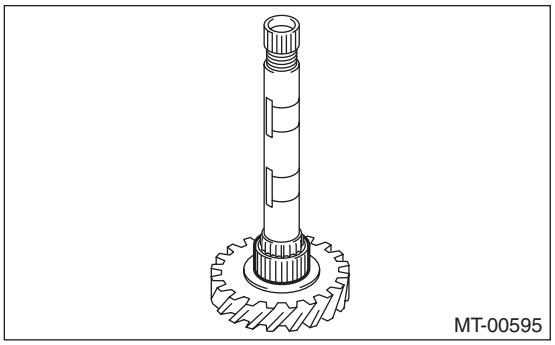

3) Attach the 1st driven gear to the driven shaft.

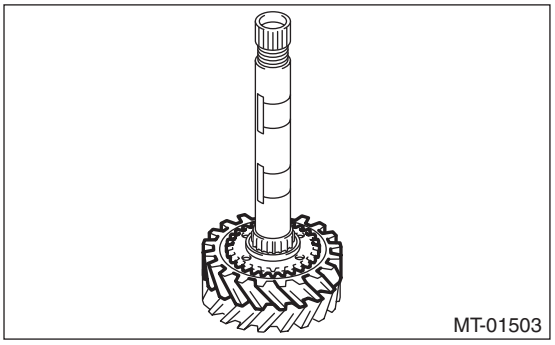

4) Install the inner baulk ring.

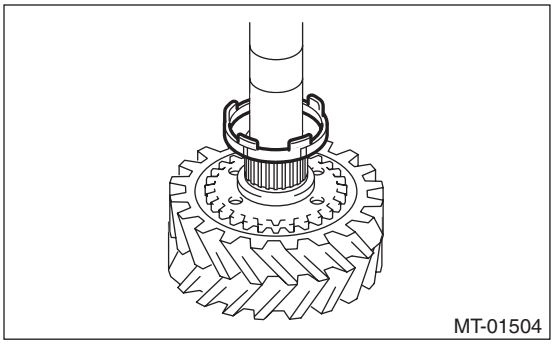

5) Match the protrusion of the 1st synchro cone to the hole of the 1st drive gear, then install.

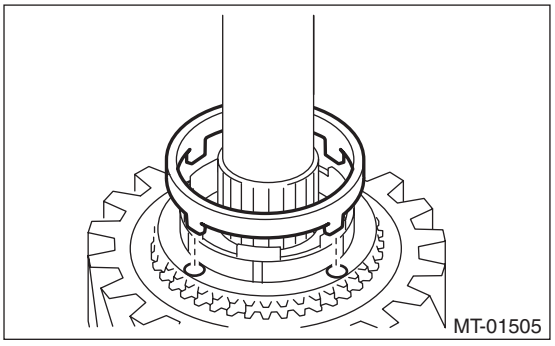

6) Install the outer baulk ring.

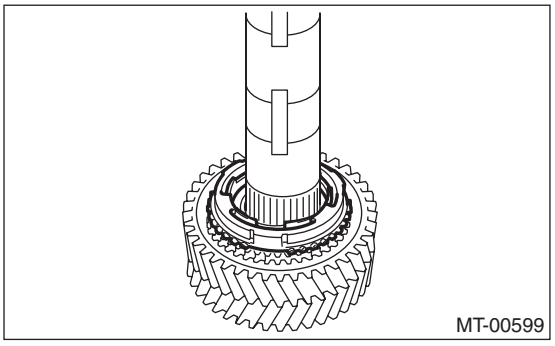

7) Install the 1st-2nd hub.

NOTE:
- Match the cut out of the 1st-2nd hub with the protrusion on the outer baulk ring, then install.
- Make sure that the 1st-2nd hub is installed in the correct direction.

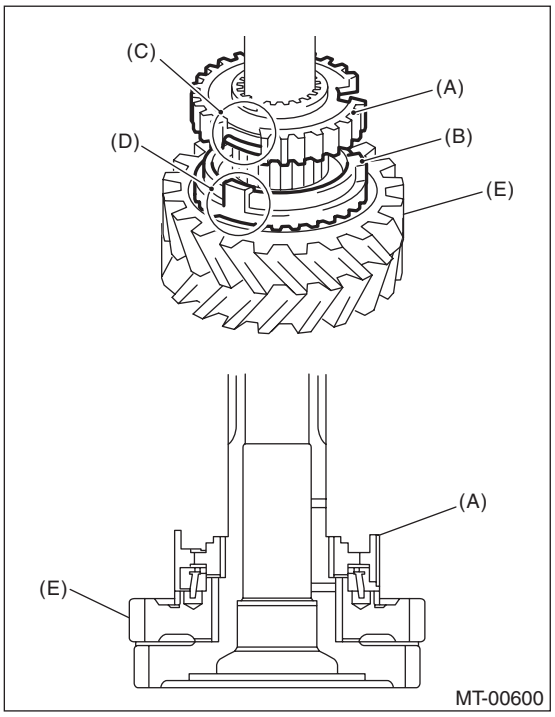

(A) 1st-2nd hub
(B) Outer baulk ring
(C) 1st-2nd hub cut out section
(D) Protrusion of the outer baulk ring
(E) 1st driven gear

8) Using the ST, install the 2nd hub.
ST 18654AA000 INSTALLER

CAUTION:
Do not apply pressure in excess of 40 kN (4.0 ton, 4.4 US ton, 3.9 Imp ton).

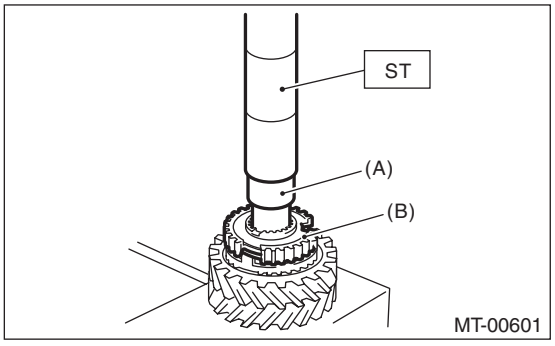

(A) 2nd bushing
(B) 1st-2nd hub

9) Make sure that the 1st drive gear can be turned smoothly by hand. If it does not turn smoothly, reassemble.
10) Attach the shifting insert key to the appropriate position of the 1st-2nd sleeve.

NOTE:
The angle of each shifting insert key is 120°.

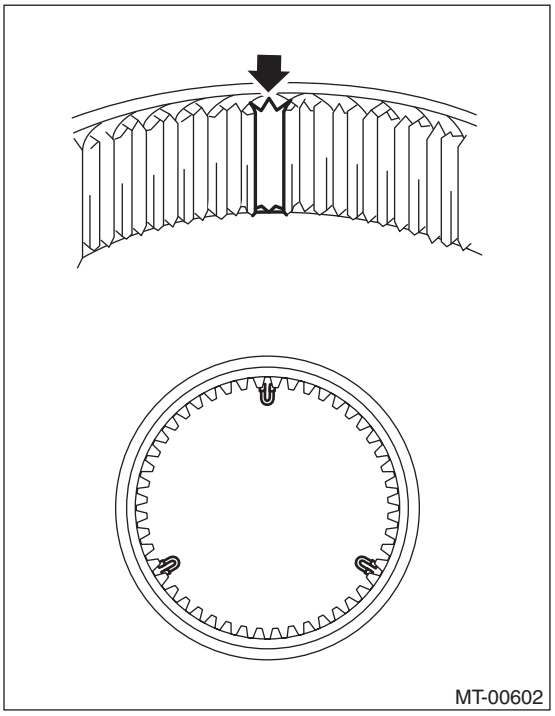

11) Attach the 1st-2nd sleeve to the 1st-2nd hub.

NOTE:
Make sure that the 1st-2nd sleeve is installed in the correct direction.

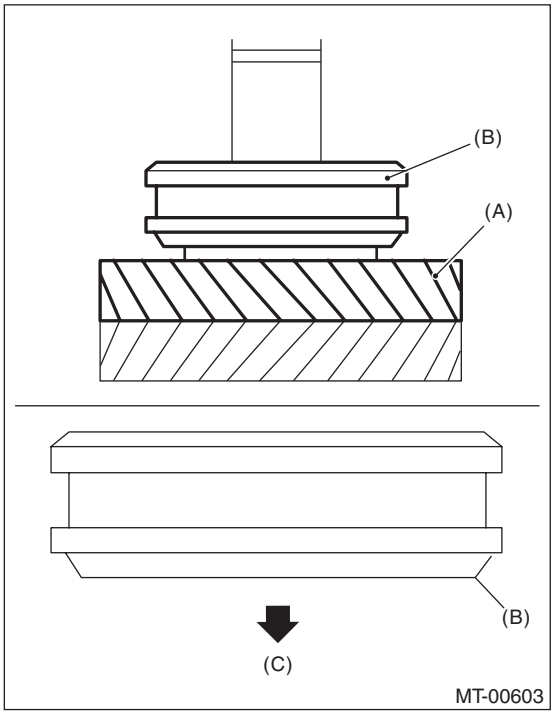

(A) 1st driven gear
(B) 1st-2nd sleeve
(C) 1st driven gear side

12) Install the outer baulk ring.

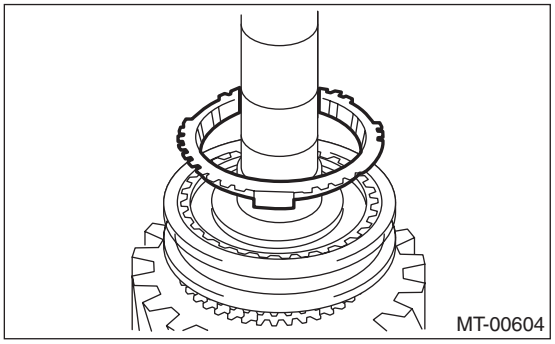

13) Install the 2nd synchro cone.

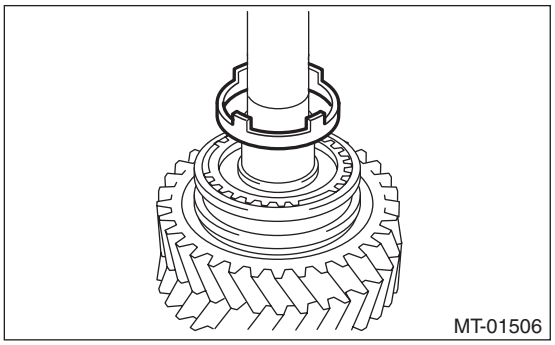

14) Install the inner baulk ring.

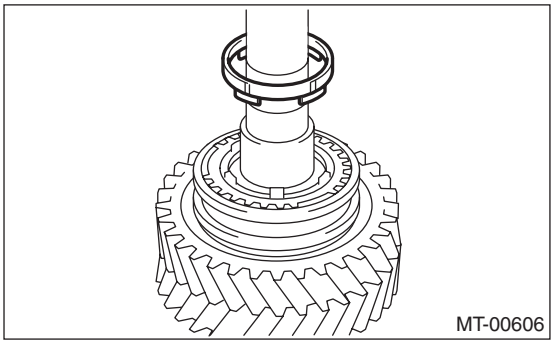

15) Apply adequate gear oil to the bushing, 2nd needle bearing and 2nd drive gear inner surface.
16) Install the 2nd needle bearing and 2nd driven gear.

NOTE:
Match the protrusion of the 2nd synchro cone to the hole of the 2nd driven gear, then install.

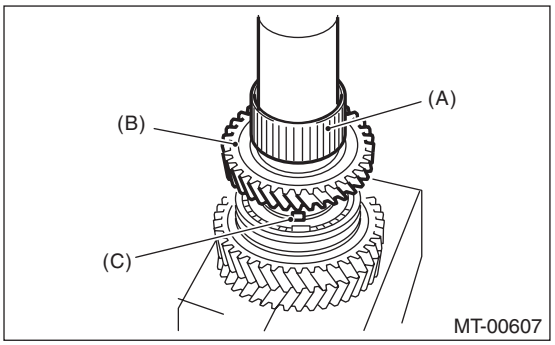

(A) 2nd needle bearing
(B) 2nd driven gear
(C) Protrusion of the 2nd synchro cone

17) Attach the key.

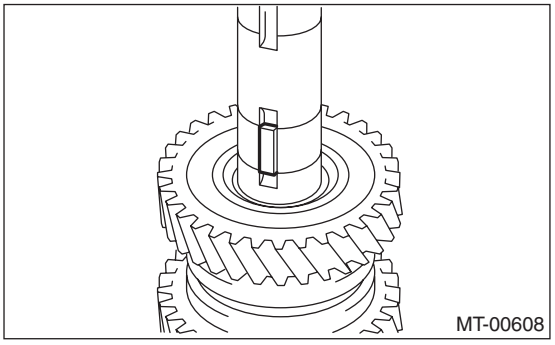

18) Using the ST, install the 3rd-4th driven gear.
ST 18654AA000 INSTALLER

CAUTION:
Do not apply pressure in excess of 40 kN (4.0 ton, 4.4 US ton, 3.9 Imp ton).

NOTE:
• Make sure that the 3rd-4th driven gear is installed in the correct direction.
• Match the groove on the 3rd-4th driven gear to the key.

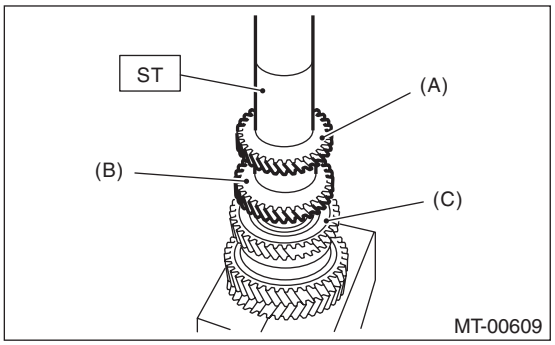

(A) 4th gear
(B) 3rd gear
(C) 2nd gear

19) Make sure that the 2nd driven gear can be turned smoothly by hand. If it does not turn smoothly, reassemble.
20) Attach the key.

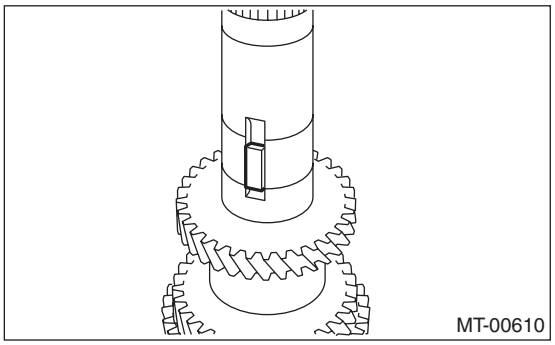

21) Using the ST, install the 5th-6th driven gear.
ST 18654AA000 INSTALLER

CAUTION:
Do not apply pressure in excess of 40 kN (4.0 ton, 4.4 US ton, 3.9 Imp ton).

NOTE:
• Make sure that the 5th-6th driven gear is installed in the correct direction.
• Match the groove on the 5th-6th driven gear to the key.

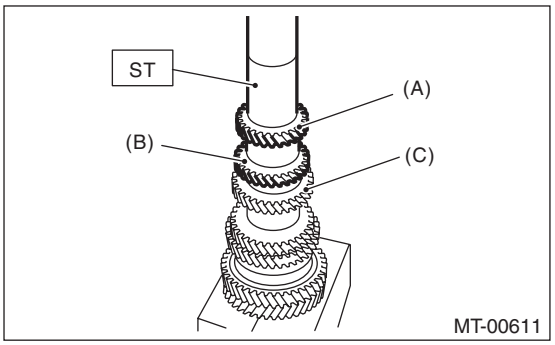

(A) 6th gear
(B) 5th gear
(C) 4th gear

22) Using the ST, install the ball bearing.
ST 18654AA000 INSTALLER

CAUTION:
Do not apply pressure in excess of 40 kN (4.0 ton, 4.4 US ton, 3.9 Imp ton).

NOTE:
Confirm that the ball bearing is installed in the proper direction.

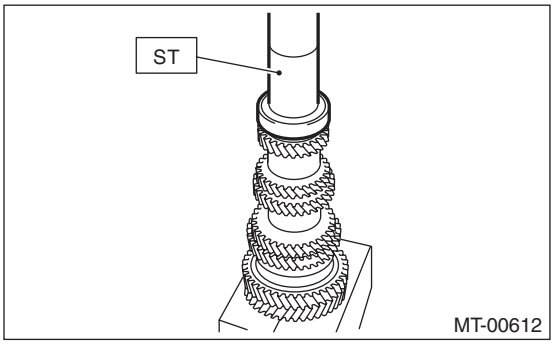

23) Make sure that the ball bearing turns smoothly by hand. If it does not turn smoothly, reassemble.
24) Install a new lock nut.

25) Attach ST3 to the lock nut, attach ST to the driven gear assembly, and tighten the lock nut.
ST1 18666AA000 HOLDER
ST2 18664AA000 BASE
ST3 18620AA000 ADAPTER WRENCH
ST4 18852AA000 TORQUE WRENCH

Tightening torque:
530 N·m (54.0 kgf-m, 391 ft-lb)

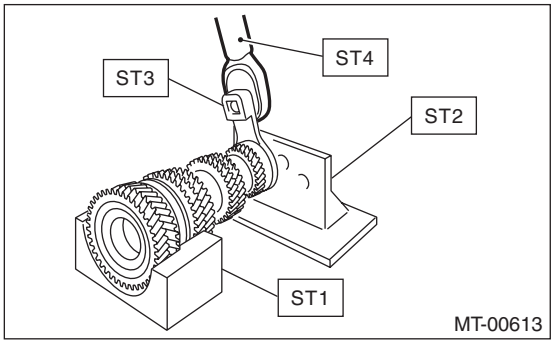

NOTE:
When using a torque wrench other than ST4, use the calculation below to calculate and tighten the lock nut.
T = L1/(0.1 + L1) × 570

T N·m (kgf-m, ft-lb)	Torque wrench setting
L1 m (in)	Torque wrench length
0.1 m (3.94 in)	Length of ST
570 N·m (58.1 kgf-m, 420 ft-lb)	Tightening torque (lock nut):

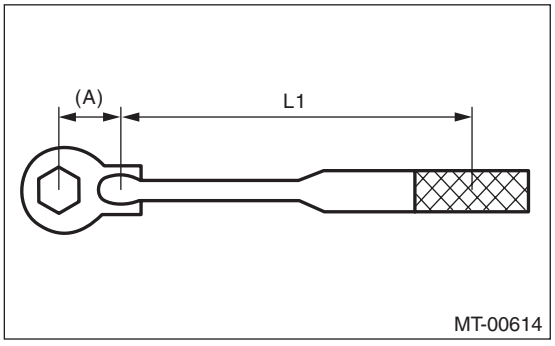

(A) 0.1 m (3.94 in)

26) Using the ST, crimp the lock nut in 4 locations, with dimensions within A 44±0.5 mm (1.73±0.02 in).
ST 18669AA000 PUNCH

NOTE:
Do not damage the crimp area of the lock nut.

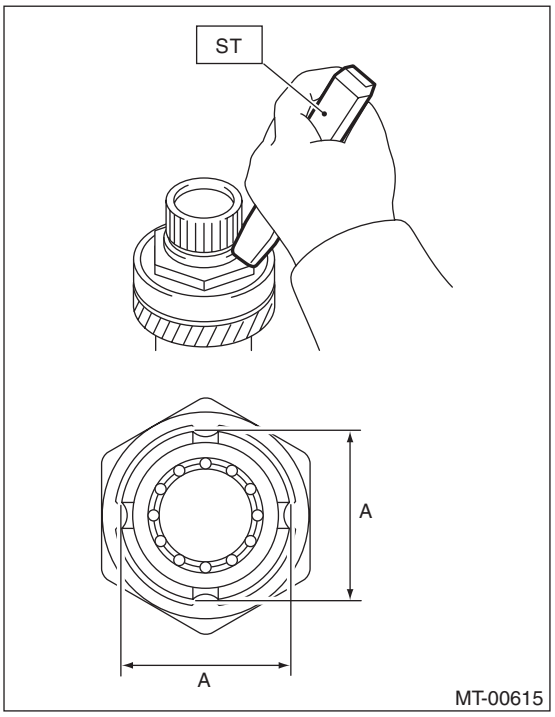

E: INSPECTION

Disassembled parts should be washed with water first and then inspected carefully.

1) Bearing

Replace the bearings in the following cases.

- Bearing wear, rusting or damage
- If the bearing does not rotate smoothly or an abnormal noise is emitted when turning.
- When the bearing has other defects

2) Bushing (each gear)

Replace the bushing in following cases.

- When gear sliding surfaces are damaged or excessively worn.

3) Gear

Replace gears in the following cases.

- When gear teeth are damaged or excessively worn.
- If the contact area of the baulk ring is damaged.
- If the inner face of the gear is worn.

4) Baulk ring, synchro cone

Replace the baulk ring and synchro cone in following cases:

- Baulk ring wear, rusting or damage

5) Shifting insert key

Replace the shifting insert key if deformed, excessively worn or defective in any way.

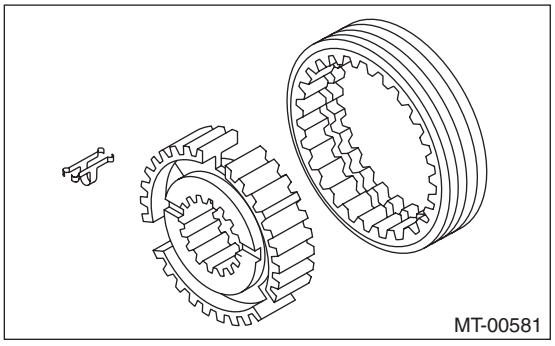

F: ADJUSTMENT

1) Measure the length “H” from the transmission case and oil pump cover mating surface, to the end face of the ball bearing.

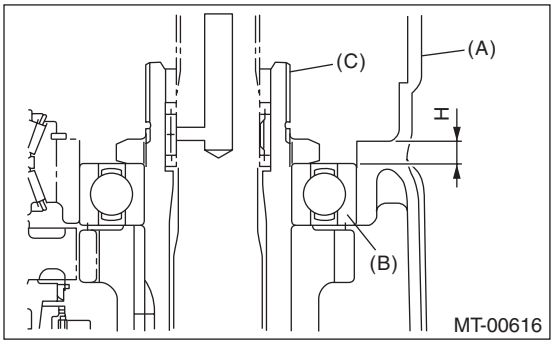

(A) Transmission case
(B) Ball bearing
(C) Driven gear ASSY

2) Using the following calculation, calculate the thickness of the driven gear assembly washer.

T = H – {5.8±0.05 mm (0.23±0.002 in)} – {0.1 — 0.3 mm (0.0039 — 0.0118 in)}

t	Washer thickness
H	Length from the transmission case and oil pump cover mating surface to the end face of the ball bearing
5.8±0.05 mm (0.23±0.002 in)	Collar thickness
0.1 — 0.3 mm (0.0039 — 0.0118 in)	Driven gear assembly axial direction backlash standard

3) Select 0 to 3 washers from the following table, and adjust to the backlash that is closest to the standard value.

Driven gear assembly axial direction backlash standard:
0.1 — 0.3 mm (0.0039 — 0.0118 in)

Washer	
Part No.	Thickness t mm (in)
803072030	0.15 (0.0059)
803072031	0.30 (0.0118)
803072032	0.45 (0.0177)
803072033	0.60 (0.0236)